Timberline 200kg

SLIDING DOOR TRACK SYSTEMS

PER DOOR

FEATURES:

- Multiple doors bottom rolling
- Heavy duty height adjustable sheave with manganese bronze tyre & 316 stainless steel housing
- Suitable for external use - especially suited to Patio doors
- Manganese bronze track
- Optional head guide block - for noise reduction
- Alternative pelmet guide and pelmet guide block to aid with weatherproofing

TT657 Adjustable sheave with bronze wheel
TT612 Manganese bronze track - 2500, 3000, 4500 and 6000mm undrilled
4500 & 6000mm pre-drilled and countersunk
TT208A Aluminium head guide - 2500, 3000, 4500 & 6000mm mill undrilled
4500 & 6000mm mill pre-drilled & countersunk
TT658 Alum. pelmet guide - 4500 & 6000mm bronze anodised & clear anodised undrilled
4500 & 6000mm bronze anodised & clear anodised pre-drilled - Optional
TT659 Pelmet guide block - Optional
TT669 Nylon head guide block

Top Groove Joinery Detail using **TT658** Pelmet Guide and TT659 Pelmet Guide Block - 24mm D x 8mm T

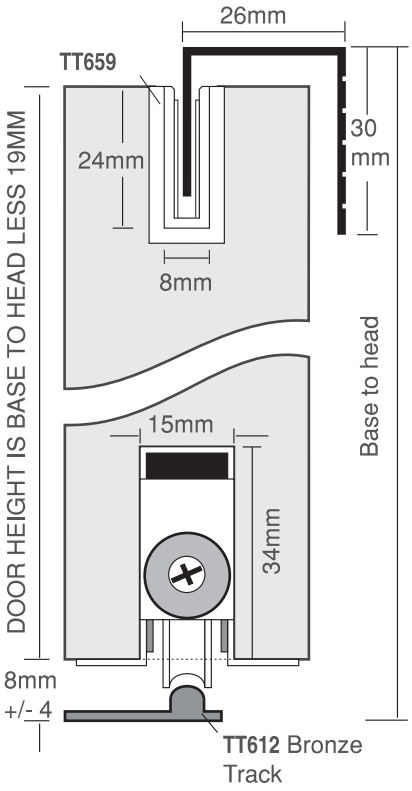

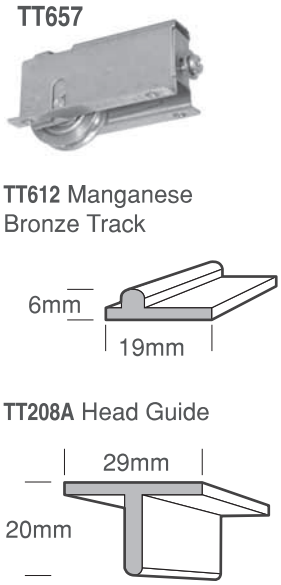

Top groove joinery detail using **TT208A** Head Guide & TT669 Head Guide Block - 24mm D x 8mm T

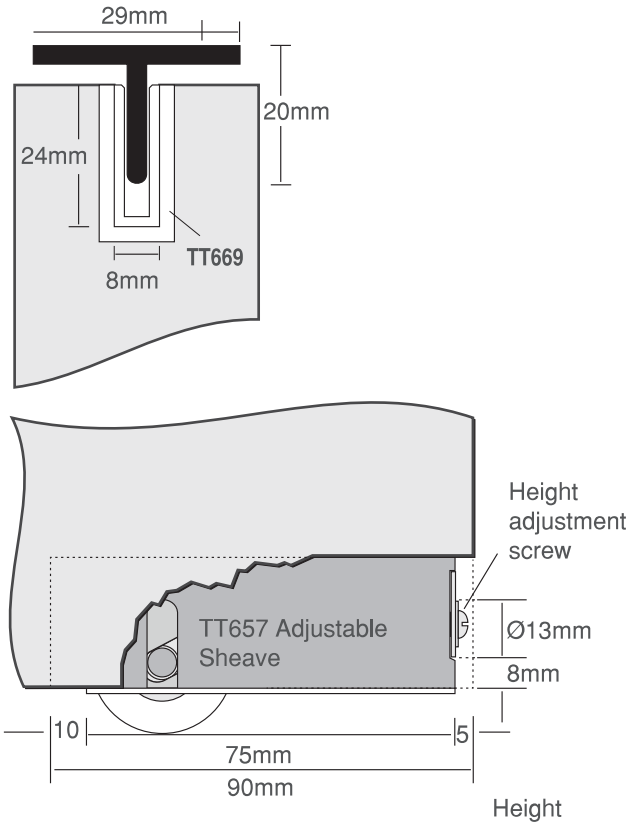

TT669 Head Guide Block Nylon. For use with TT208A

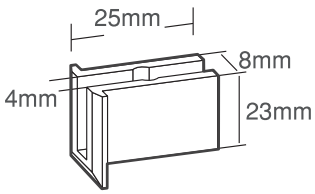
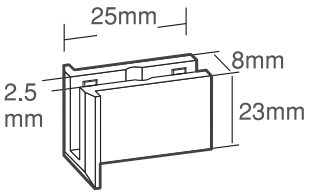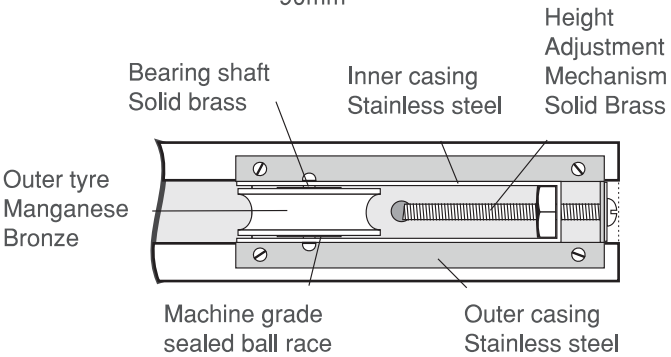
TT659 Pelmet Guide Block - Nylon. For use with TT658